REV.	DATE	ECO NUMBER (DESCRIPTION)	APPR'D
1.00	30Oct12	Released	SK

UEXT Connector (3V3 Logic Levels)

(DTE Signal Names on Header, TX is an output)

2x5 DIL Shrouded Header

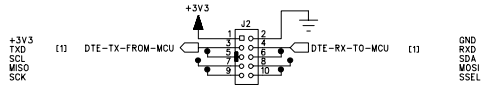

RS232 DCE Connector

(TX is an input to ComBoard)

DB9 Female, RA

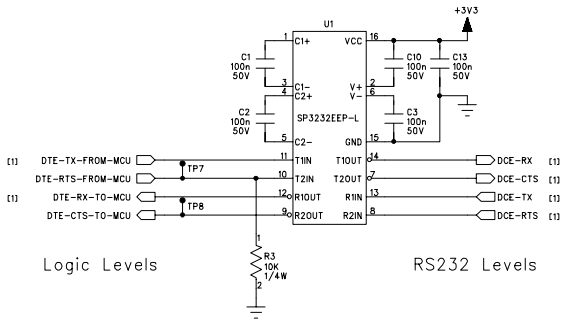

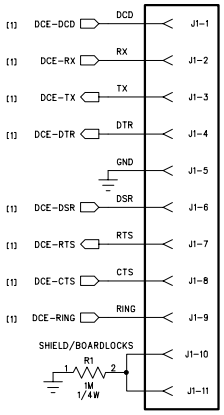

Note the terminology change. For example:
The data comes in on DCE-TX at RS232 levels.
We switch to DTE naming when we convert to logic level and the signal name becomes DTE-RX-TO-MCU.

This allows the DTE and the DCE modules to have the same pins names on the logic level side.

RS232 DCE Header

(TX is an input to ComBoard)

2x5 DIL Header

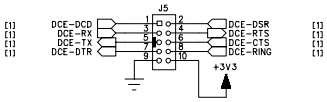

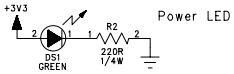

Mounting Holes

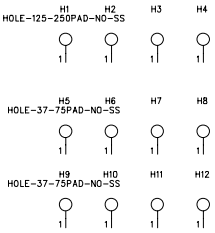

DESIGNED	DATE
Scot Kornak	Oct 2012
DRAWN: Scot Kornak	DATE: Oct 2012
CHECKED: Scot Kornak	DATE: Oct 2012
APPROVED: Scot Kornak	DATE: Oct 2012

BusBoard Prototype Systems Ltd.

www.BusBoard.net

THIS DRAWING IS ISSUED BY BUSBOARD PROTOTYPE SYSTEMS LTD. IN CONFIDENCE AND IS NOT TO BE REPRODUCED OR RELEASED, IN WHOLE OR IN PART, WITHOUT THE PRIOR WRITTEN PERMISSION OF B.P.S. Ltd. THE INFORMATION CONTAINED HEREIN IS THE PROPERTY OF B.P.S. Ltd., AND IS TO BE USED ONLY FOR THE PURPOSE FOR WHICH IT IS SUBMITTED.
(C) Copyright 2010 BusBoard Prototype Systems Ltd., All Rights Reserved

CLASSIFICATION

RELEASED TO PUBLIC

TITLE

UX-232F
UEXT RS232 Board
(DCE, DB9F)

SSI DRAWING NUMBER - REVISION

BPS-SCH-(UX-232F) Rev 1.00

DRAWING IS FOR PART NUMBER - REVISION

PCB-7870-1.00 (UX-232F)

SHEET 1 OF 1